SPATEC N.I. LTD

BOILING | CHILLED | SPARKLING

Zip

IT'S WATER. REFRESHED.

Zip HydroTap® G4

Boiling | Ambient | Filtered | Instantly

With new Zip G4 power-saving technology and Zip 0.2 micron filtration.

Boiling and ambient filtered water instantly, for workplace kitchens.
Choice of 2 delivery capacities for kitchens large & small.

1. Saving energy

- Superior Zip G4 thermal insulation now significantly reduces standby energy consumption.
- Power-Pulse™ technology maintains boiling water to within 2.0℃ of set temperature.
- Adjustable boiling temperature set-point.
- Sleeps or "powers-off" after two hours of non-use, to minimise daily power consumption.
- Automatically sleeps when the kitchen goes dark, for added power savings overnight.
- Integral 24/7 automatic timer turns power on and off over weekends or weekday periods.

2. User safety

- Choice of fingertip control for fast cup filling (lever down) or hands-free pot filling (lever up).
- Safety device requires finger-thumb operation to access boiling water, eliminating the risk of accidental use.
- Can also be set to boiling water "isolation mode" for total safety when kitchen is unattended.

3. Healthier drinking

- Inbuilt Zip 0.2 micron, NSF-certified, filter puts crystal-clear, better-tasting water on tap, filtering out chlorine taste and odour and impurities as tiny as one five-thousandth of a millimetre, but does not remove beneficial fluoride.

New under-sink Zip G4 Command-Centre™ leads the world in energy-saving technology, has a pin-code protected touch-screen to simplify adjustments and automatically monitors performance to give an operating history if ever required.

Warranty

24 months, plus additional 36 months boiling tank warranty.

Typical specification

Under-sink boiling, and ambient, filtered water appliance equipped with two way lever action electronic tap head. Integral 5 bar pressure limiting and Dual Check valve, NSF certified 0.2 micron filter.

Full colour interactive touch screen display with pin code protection, 2 boiling water safety modes, 3 energy saving modes including a sensor activated "sleep when its dark" feature.

Upgradable boiling water capacity with additional "Booster" module (160 model only) and the ability to adapt to provide approx. 55℃ hot water for sanitary use to a secondary outlet with additional "Vented Mixer" kit.

WRAS APPROVED PRODUCT CE

37a Villa Wood Road, Dromore, Co Down Northern Ireland
BT25 1LG
T: 02892 699200 F: 028 92692745
E: info@spatec.co.uk w: spatec.co.uk

Zip HydroTap® G4

Boiling | Ambient | Filtered | Instantly

Zip model	Product code	Boiling** cups/hr	Power rating kW@230V	Dimensions (mm) W	D	H
BA160G4	HT1708UK	160	1.90	280	313	335
BA240G4*	HT1709UK	240	1.90 + 2.20	280	313	335

* Installed with a 2.20kW, externally mounted, booster unit and MUST be connected to a separate 13 amp supply.
** Cup size based upon 167ml.

Technical Features

Boiling System
Open outlet, vented system, factory set to operate at 98°C.

Flow rate 4.0 l/min.

Location

Tap must be positioned so that it drains into a suitable sink, or be installed on the optional "tap font kit" which is plumbed to waste.
Tap should be situated within 1 metre of and directly above the Command Centre™. Command Centre™ must have clearances as shown on the drawings below.
Ventilation accessories (supplied) must be installed as per instructions.

Approvals
CE endorsed.
WRAS approved.

Plumbing
Must be installed In accordance with UK Water Supply Regulations.
Designed for direct connection to a potable (drinkable) cold water supply with a minimum pressure of 1.7 bar (also 1.7 bar if fitted with booster unit or scale filtration). A 5 bar pressure limiting valve is fitted internally.
An isolating valve should be installed between the water supply and the Command Centre™.

Electrical
Installation must comply with current IEE regulations.
Connect to a 13 amp socket.
Model 240 is installed with an externally mounted 2.2kW booster unit and must be connected to a separate 13 amp supply.

Caution
In hard water areas where mineral scale accumulation may be an issue, consideration should be given to the maintenance required. We recommend use of the Zip Professional high performance limescale filtration system. For more information see the Zip specification sheet on limescale filtration.

Technical Support
Contact Zip on:
Tel: 0845 6 005 005 or 0345 6 005 005
e-mail: service@zipindustries.co.uk

Accessories

Finishes
The above models are in Bright Chrome, for alternative finishes add the following codes to the HT codes: (e.g. HT1708**Z1**UK)
Brushed Chrome: Z1
Gloss Black: Z2
Matt Black: Z3

Zip G4 font kit:

Bright Chrome	ZT008
Brushed Chrome	ZT009
Gloss Black	ZT010
Matt Black	ZT012

Filters

ZT402 – Zip 0.2 micron replacement filter.

Scale filters
FL2300G4 KIT – light commercial use.
FL3600G4 KIT – normal commercial use.
FL6000G4 KIT – heavy commercial use.

Oversize levers
To order any model to be supplied with extension levers and Braille pads, add D to the end of the Order Code.

Five Year Warranty
Appliance warranty 24 months, plus additional 36 months boiling tank warranty.
Visit www.zipwater.com/uk/support/warranty-policy

Sink detail

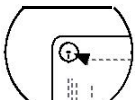

Ø35 hole for HydroTap®

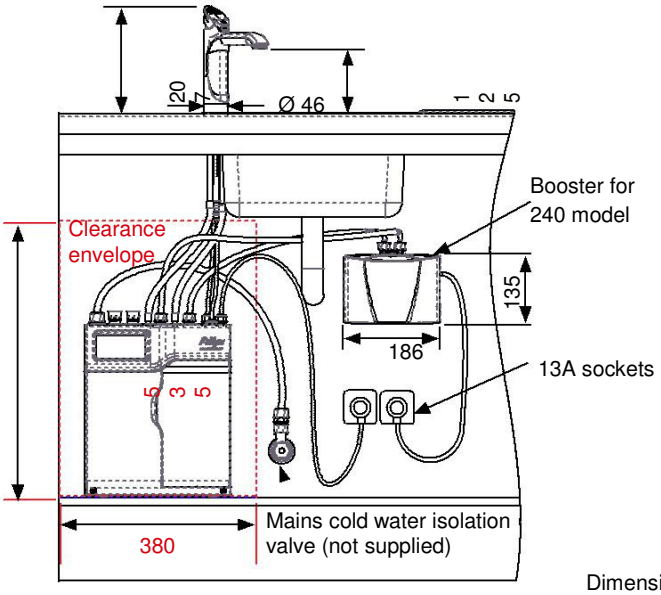

Font detail

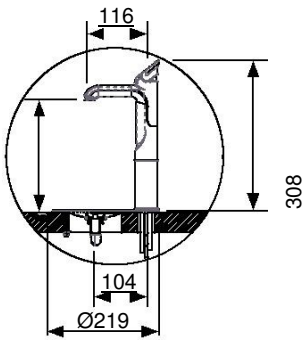

Font Cutouts

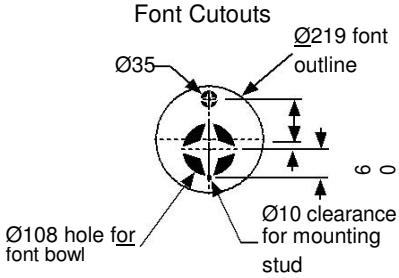

Dimensions in mm